Holland Snap Frame
WWW.HOLLANDSNAPFRAME.COM

De Wel 12a
3871 MV Hoevelaken, The Netherlands
Tel.: 0031 (0)33 - 25 81 179
Fax: 0031 (0)33 - 25 30 640
Email: info@hollandsnapframe
Site: www.hollandsnapframe.com

PRODUCT INFORMATION BASE PLATE ADVERTISINGPILLAR 500 CM

Articlenumber	**940/V5000**
Size base	**350 x 350**
Heigth	**1370 mm**
Max. heigth pillar	**5000 mm**

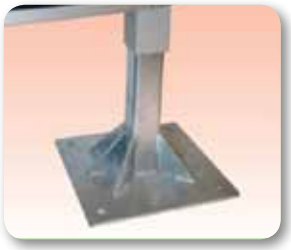

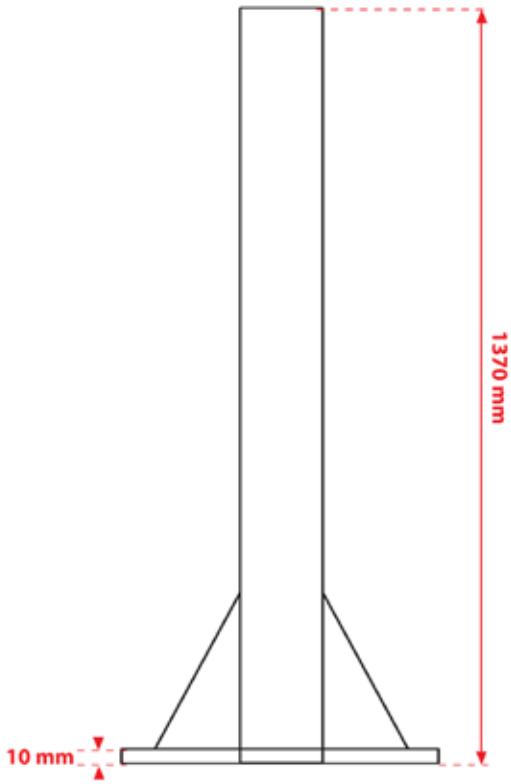

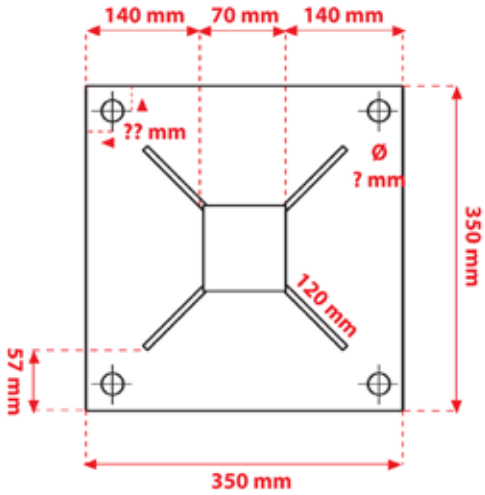

It isn't possible to derive any rights from this information. Sizes can vary. Printer's-, compositor's- and misprint errors r