Holland Snap Frame
WWW.HOLLANDSNAPFRAME.COM

De Wel 12a
3871 MV Hoevelaken, The Netherlands
Tel.: 0031 (0)33 - 25 81 179
Fax: 0031 (0)33 - 25 30 640
Email: info@hollandsnapframe
Site: www.hollandsnapframe.com

PRODUCT INFORMATION 32 MM PROFILE/45° MITRED CORNERS

Articlenumber	**UCN325N0B0**
Din size	**B0**
External dimension	**1043 x 1443 mm**
Poster size	**1000 x 1400 mm**
Visible part size	**980 x 1380 mm**
Structure	**Aluminium, silver anodised**

Snap frames for the display of posters and full colour prints. To fit the poster simply open the snap frame, remove the PVC sheet, place the poster in the frame, cover it with the transparent PVC sheet and close the snap frame. The snap frame comes standard with four mounting holes and screws. The aluminium snap frames are silver anodised and have mitred corners. The profile width is 32 mm.

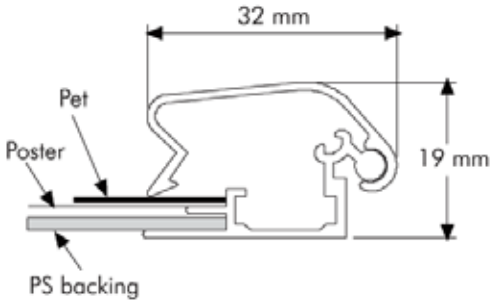

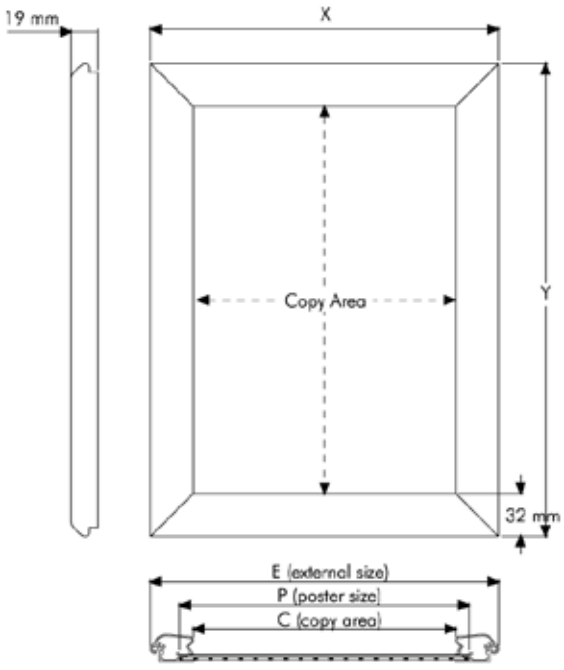

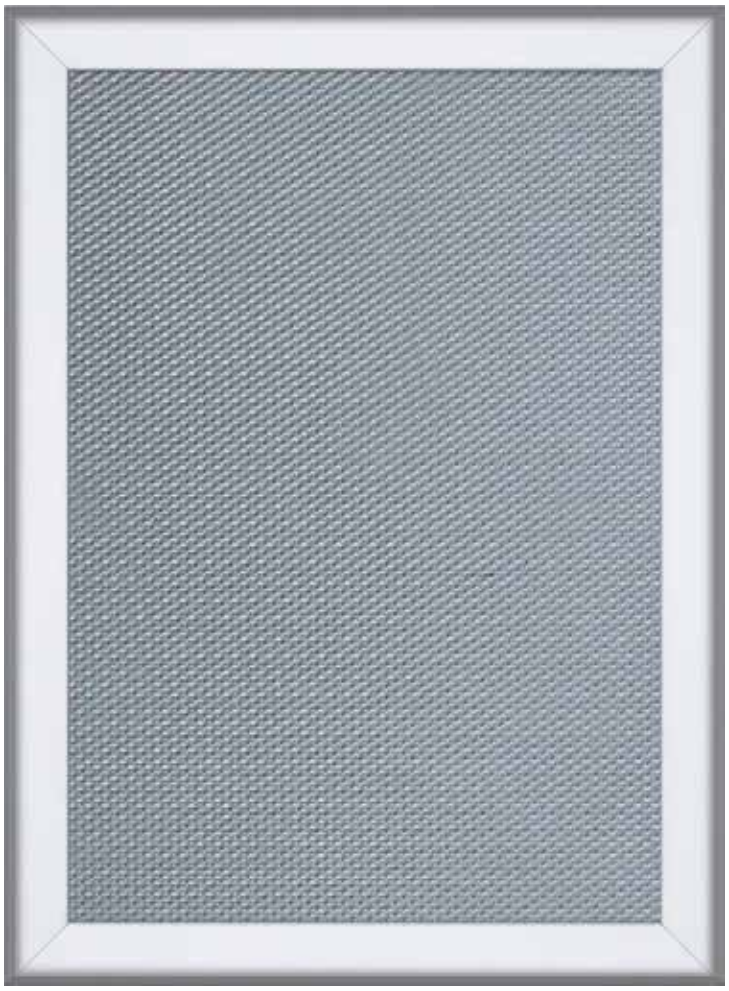

It isn't possible to derive any rights from this information. Sizes can vary. Printer's-, compositor's- and misprint errors reerved.